# Power Supply for Kearfott MRLG 1 (SG-KF1)

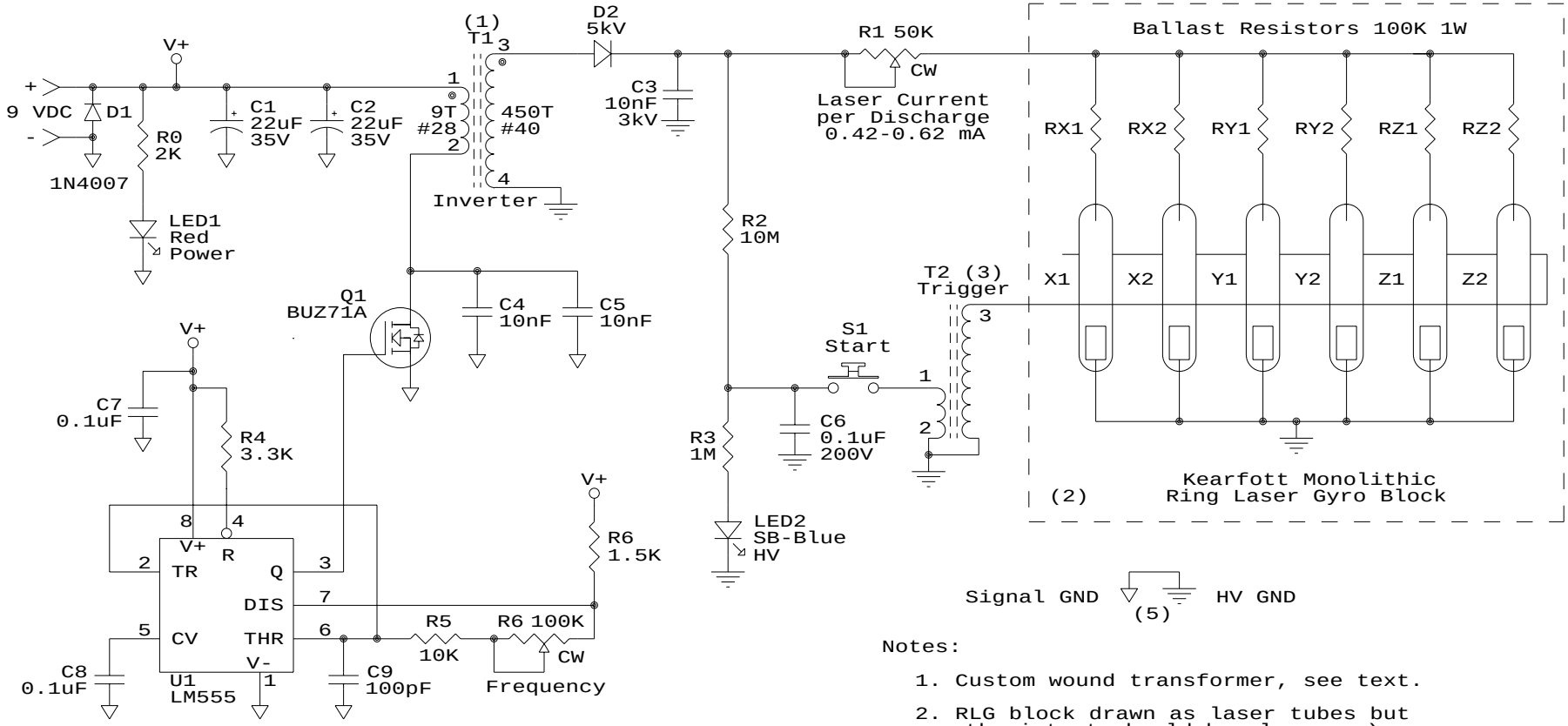


Variable Frequency Oscillator

Notes:

1. Custom wound transformer, see text.
2. RLG block drawn as laser tubes but the intent should be clear. ;-)
3. Xicon PN 422-3306.
4. Laser operating current fine tuning.
5. Isolate the GNDs if needed.


Samuel M. Goldwasser
sam@repairfaq.org


| | | |
|---|---|---|
| Title | | |
| Power Supply for Kearfott MRLG 1 (SG-KF1) | | |
| Size | Document Number | REV |
| A | SG-KF1-SCH | 1.2 |
| Date: March 8, 2026 | Sheet 1 of 1 | |